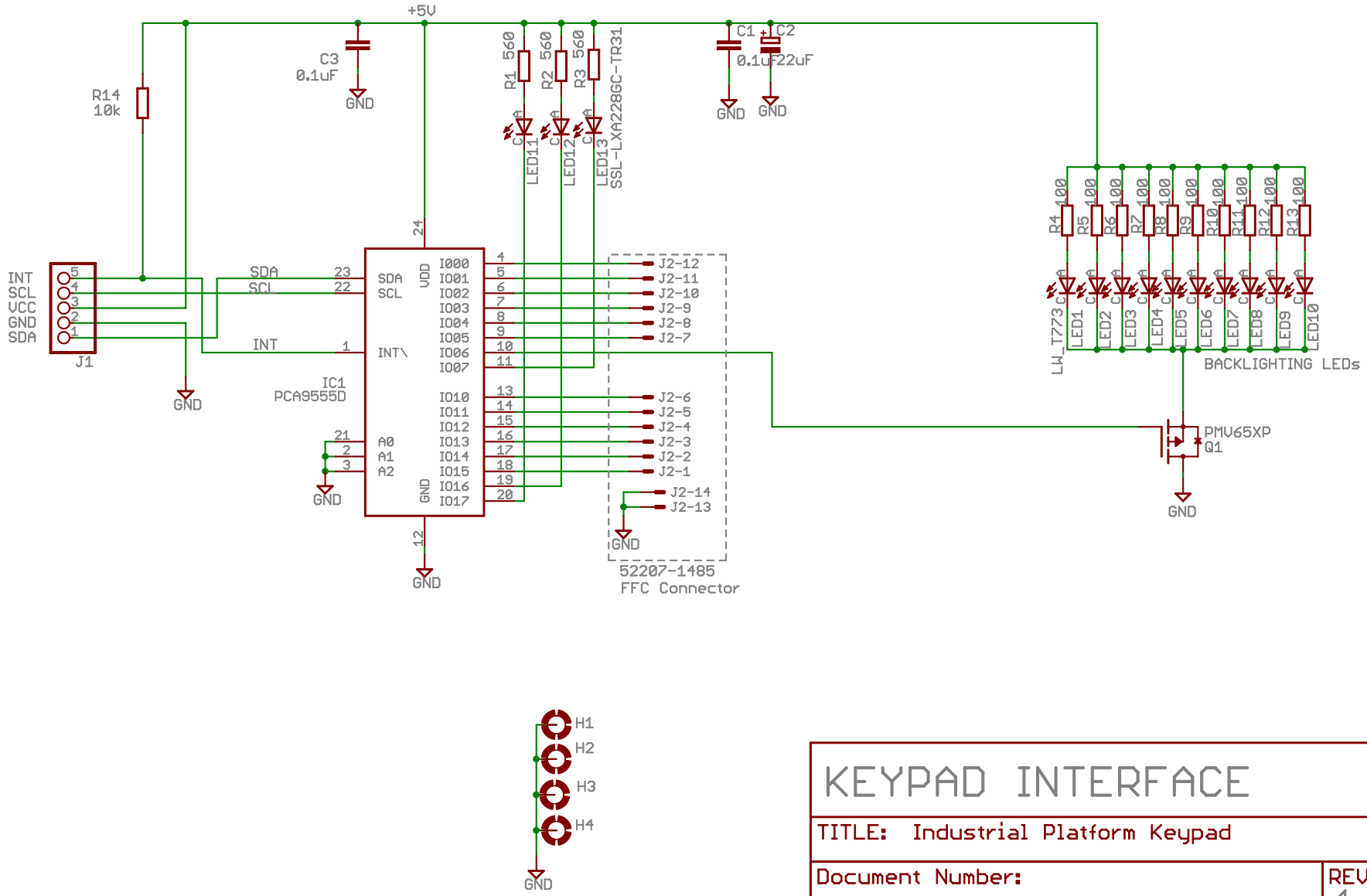

KEYPAD INTERFACE

TITLE: Industrial Platform Keypad

Document Number:

REV: 1.0

Date: 3/24/2008 05:46:56p

Sheet: 1/1